SUN Floreale

LED **350mA - 3,5W**

IT **Faretto da incasso** - Realizzato in metallo con schermo in policarbonato; ghiera esterna in policarbonato con decoro finitura anticata.

EN **Recessed spotlight** - Metal structure and screen in polycarbonate; ring in polycarbonate with classic décor and antique finish.

DE **Einbaustrahler** - Metall-Gehäuse und Polykarbonat- Abdeckung; einbauring aus Polykarbonat mit Antik-Dekor und Ausführung.

118-140 lm/W PHOTOBIOLOGICAL CLASS 0 CRI=85

IP20 IP44 PATENTED

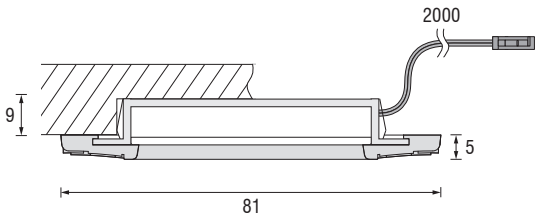

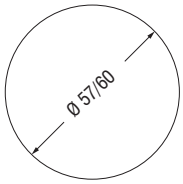

Foro di incasso
Recessed hole / Einbaumaße

Decoro
Décor / Dekor

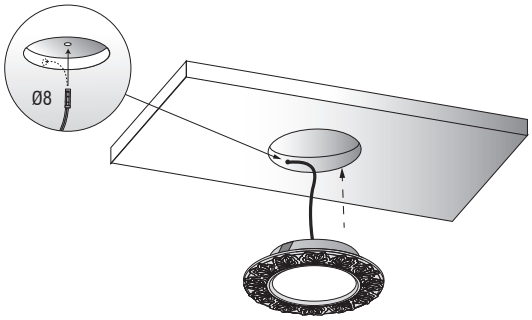

Finitura Silver Bronze
Silver Bronze finish / Silver Bronze-Ausführung

Finitura Finish - Ausführung	3000 K		Imballo - Packaging - Verpackung		
	Codice - Part no. - Artikel-Nr.	EEC	Pcs	Kg	mm
Golden Bronze / Golden Bronze / Golden Bronze	1730020GB	A++	1	0,084	100 x 90 x 23
Silver Bronze / Silver Bronze / Silver Bronze	1730020SB	A++	1	0,084	100 x 90 x 23
Oro lucido / Shiny Gold / Gold	1730020OL	A++	1	0,084	100 x 90 x 23
Cromo lucido / Shiny chrome / Chrom	1730020CL	A++	1	0,084	100 x 90 x 23

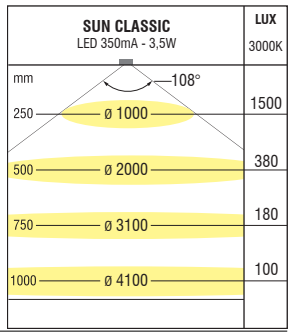

Dimensioni in millimetri (mm) / Dimensions in Millimiters (mm) / Dimensionen in Millimetern (mm)
Alimentatore non incluso / Driver not included / LED-Konverter nicht inbegriffen

Connettore
Connector / Verbindungsstecker